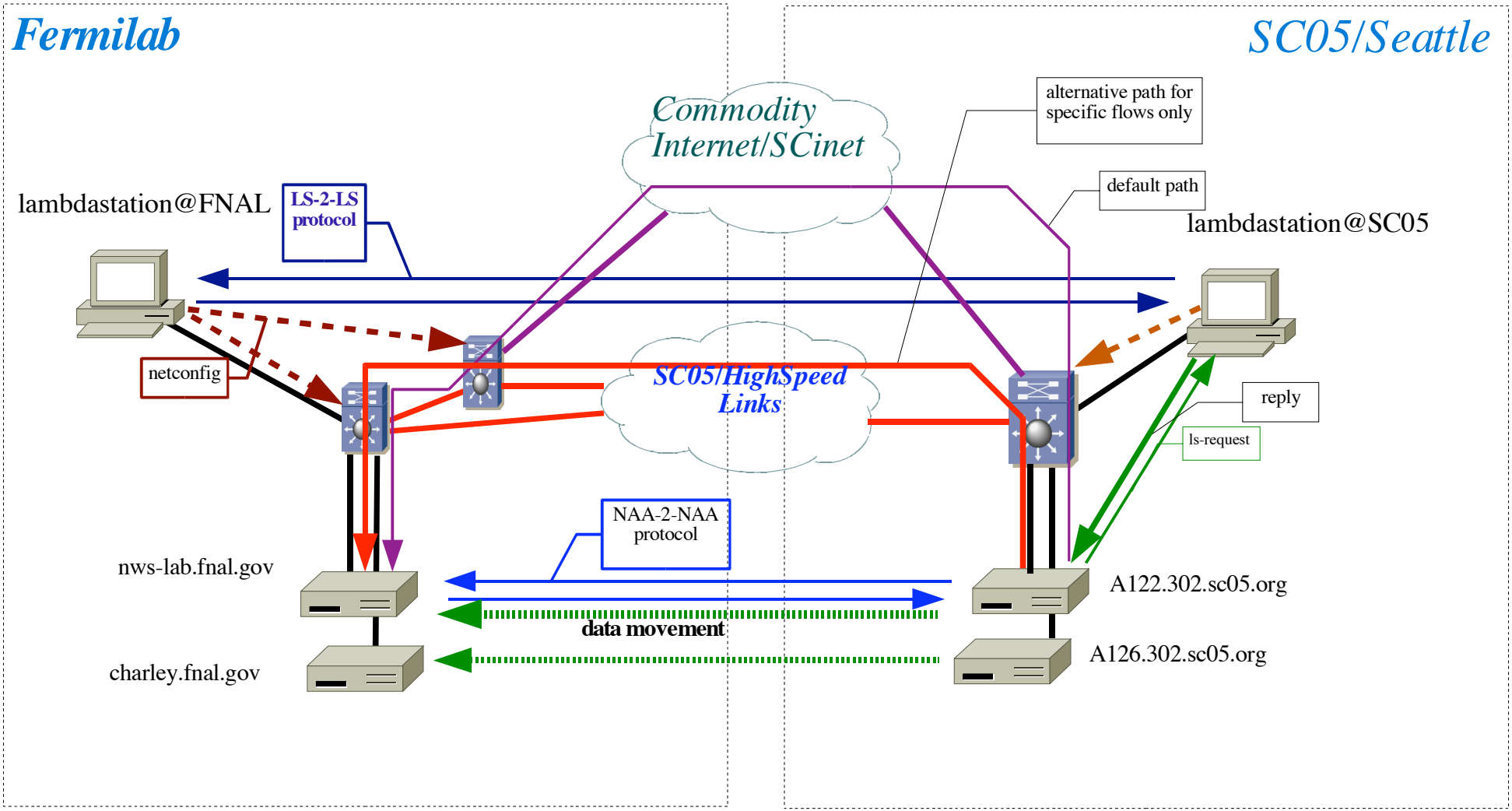LambdaStation SC05 Demo