AFEII-t Note

DATE: 5/25/2007

TO: THE POWERS THAT BE

FROM: PAUL RUBINOV

RE: FPS BIAS SHARING MOD FOR AFEII-T

BACKGROUND

The Forward Preshower detector is composed of two layers: a shower layer and a MIP layer. The arrangement of the fibers from these layers is such that sometimes the fibers come out in groups of 72 and sometimes in groups of 48. However, since the AFEII-t is organized in 64 channel modules, it is necessary to share the fiber group across two modules. In other words, 64 of the fibers land on the main module and either 8 or 16 land on the neighbor module. In order to provide the proper bias for the 8 or 16 fibers that land in the neighbor module, it is also necessary to "share" the bias from the main module to the neighbor module. The AFEII-t has provisions for this sharing and it is only necessary to stuff a few resistors differently to allow the bias of the appropriate channels to be supplied from the correct module.

Bias sharing takes place between module 2 to 1, 5 to 6 as shown in Fig1.

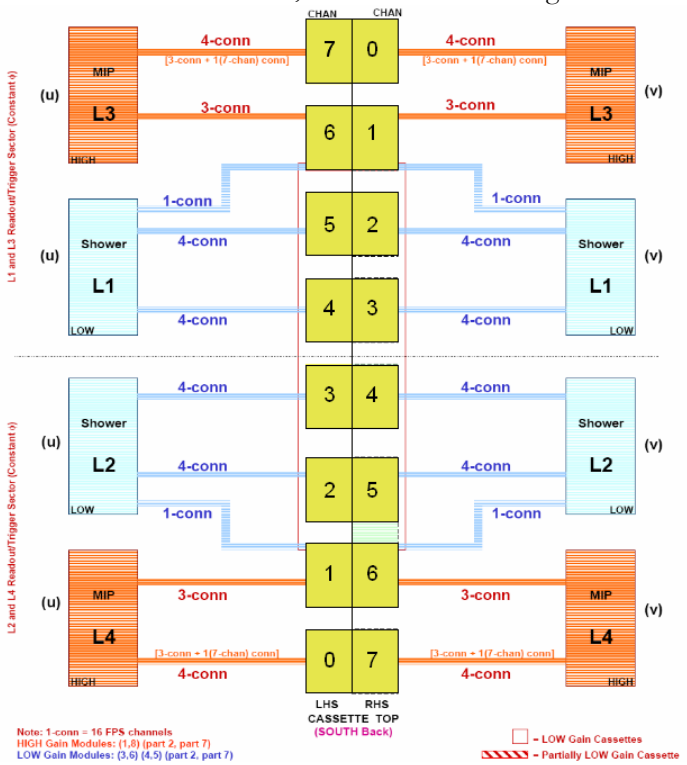

Figure 1. Bias sharing for the FPS boards. Notice this picture reverses the usual convention of where the backplane is. But this does not affect the sharing, which is symmetrical between LH and RH

In more detail, the sharing between module 1-2 and 5-6 can be understood by studying Table 1 on the next page. Note that the module numbering follows the AFEII-t board convention, from 0 to 7. Also Table 1 differs from Figure 1 in that the more usual convention of looking at the cryostat from front and above is followed (the back plane is at the top of the page). This means the LH board is on the left and the RH board is on the right, unlike in Figure 1.

Table 1. FPS cassette as seen from top. Colors show bias groups. Numbers show VLPC#

0	2	7	7
	3	6	
	4	5	
	5	4	
	6	3	
	7	2	
	8	1	
1	1	8	6
	2	7	
	3	6	
	4	5	
	5	4	
	6	3	
	7	2	
	8	1	
2	1	8	5
	2	7	
	3	6	
	4	5	
	5	4	
	6	3	
	7	2	
	8	1	
3	1	8	4
	2	7	
	3	6	
	4	5	
	5	4	
	6	3	
	7	2	
	8	1	
4	1	8	3
	2	7	
	3	6	
	4	5	
	5	4	
	6	3	
	7	2	
	8	1	
5	1	8	2
	2	7	
	3	6	
	4	5	
	5	4	
	6	3	
	7	2	
	8	1	
6	1	8	1
	2	7	
	3	6	
	4	5	
	5	4	
	6	3	
	7	2	
	8	1	
7	1	8	0
	2	7	
	3	6	
	4	5	
	5	4	
	6	3	
	7	2	
	8	1	

From Table 1, we see that 16 channels in module 1 are biased from module 2, and 8 channels in module 2 are biased from module 3. Similarly, 16 channels in module 6 are biased from module 5, and 8 channels in module 5 are biased from module 4. In order to identify the particular nets that must receive the bias from the adjacent module, we refer to the map of VLPC pixels to nets. The simplest way to picture this is by drawing a table of the pixels of a single module, as seen from above and indicating the relevant net in each cell. This is shown in Table 2 below. The nets correspond to schematic net Cn_F(m) where the n module number and m is the number in the cell of the table.

Table 2. The mapping of the Cn_Fm bus in a single module.

Cn_Fm BUS

LHB				RHB			
4	3	1	2	64	63	61	62
7	5	6	9	57	58	60	59
10	12	11	8	56	55	53	54
13	14	16	15	49	50	52	51
20	19	17	18	48	47	45	46
23	21	22	25	41	42	44	43
26	28	27	24	40	39	37	38
29	30	31	32	33	34	36	35
35	36	34	33	32	31	30	29
38	37	39	40	24	27	28	26
43	44	42	41	25	22	21	23
46	45	47	48	18	17	19	20
51	52	50	49	15	16	14	13
54	53	55	56	8	11	12	10
59	60	58	57	9	6	5	7
62	61	63	64	2	1	3	4

Note that the first Cn_Fm nets belonging to the first VLPC of a module are C1_F(1) to C1_F(7) and C1_F(9). C1_F(8) is not connected to the first VLPC. It is connected to the second VLPC. However, the last VLPC of a module IS connected to C1_F(57) to C1_F(64). The design of the AFEII-t allows for this bias sharing, as shown in Figure 2.

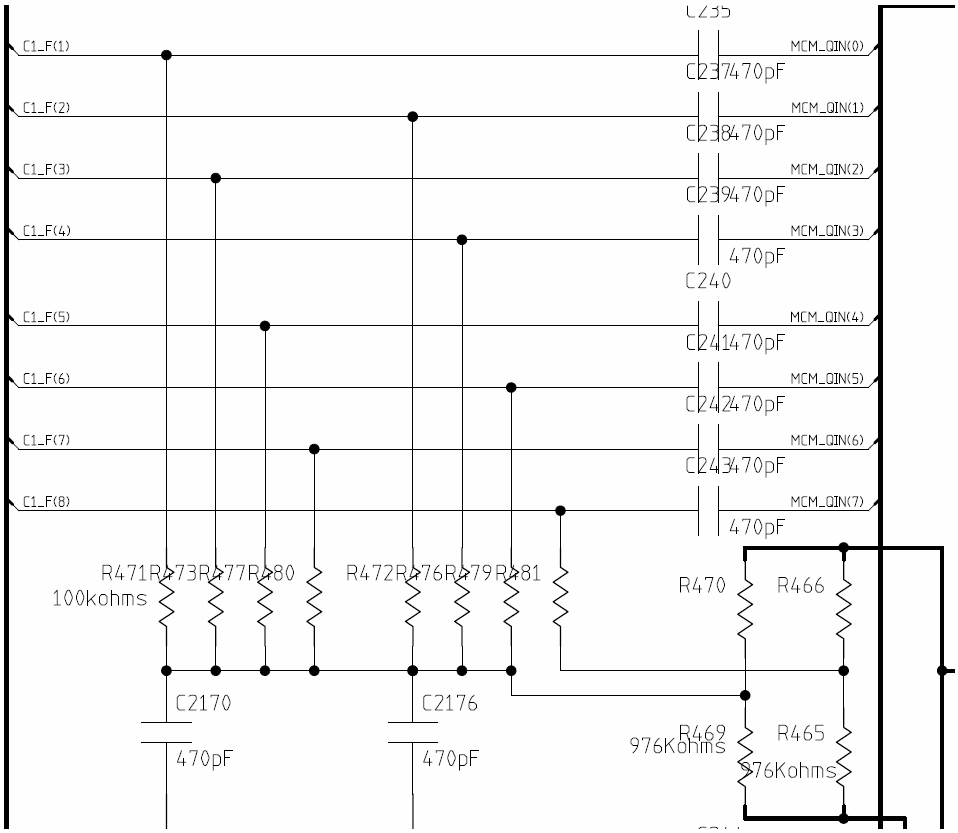

Figure 2. A portion of the schematic showing nets C1_F(1) to C1_F(8)

MODIFICATION

In order to accomplish the sharing above, a small number of resistors on the AFEII-t board must be rearranged. We have four different cases that must be considered:

A) Last 16 channels of Mod 1 biased from Mod 2 [C1_F(57) to C1_F(64)]
B) Last 8 channels of Mod 2 biased from Mod 3 [C1_F(49) to C1_F(64)]
C) First 8 channels of Mod 5 biased from Mod 4 [C5_F(1) to C5_F(7) and C5_F(9)]
D) First 16 channels of Mod 6 biased from Mod 5 [C6_F(1) to C6_F(16)]

To accomplish each case, the following modifications must be made:
For case **A)** , refer to Figure 3 and Figure 4.

1) Remove R554, R555 and R556.
2) Short the LEFT pad of R557 to the LEFT pad of R558 and the LEFT pad of R559.
3) Connect a wire jumper from R563 to this new net.

For case **B)** , refer to Figure 5 and Figure 6.

1) Remove R651.
2) Place 0 ohm resistor at location R654.

For case **C)** , refer to Figure 7 and Figure 8.

1) Remove R855 and R858.
2) Place 0 ohm resistors at locations R856 and R857.

For case **D)** , refer to Figure 9 and Figure 10.

1) Remove R948, R951, R952 and R955.
2) Place 0 ohm resistors at locations R949, R950, R953 and R954.
3) Add a wire jumper from R945 (either pad) to R950 (either pad)

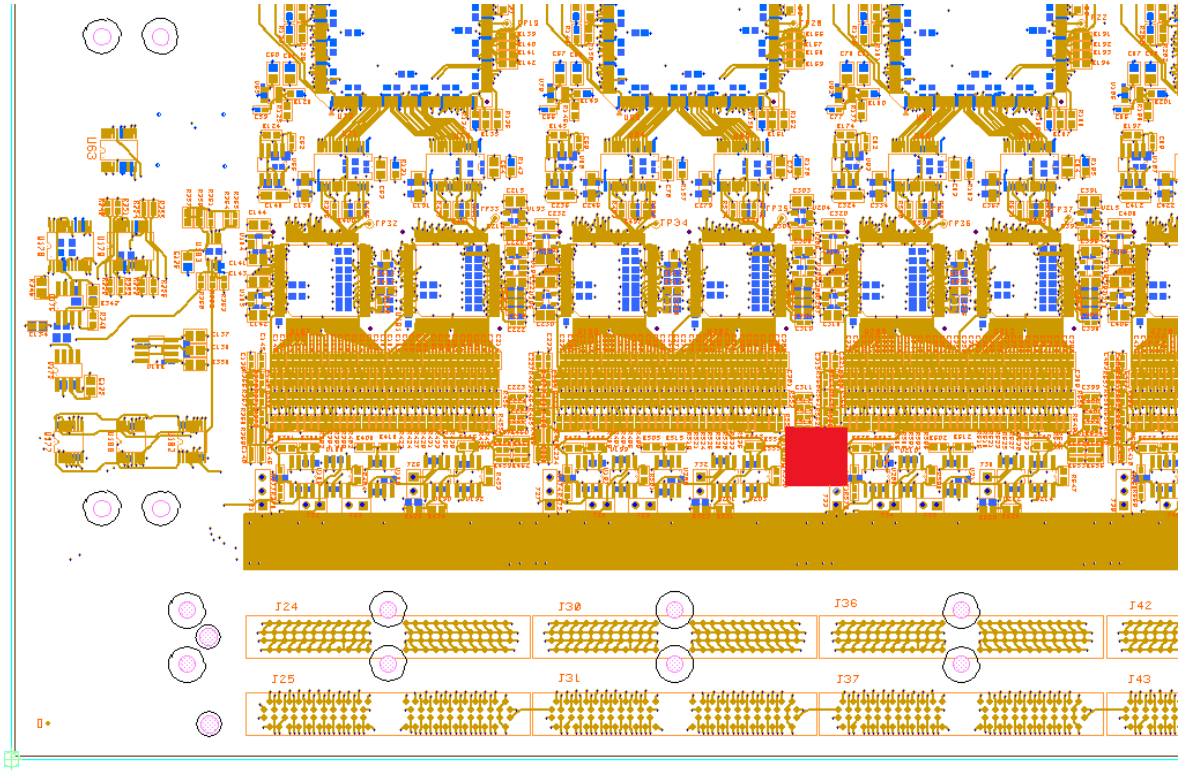

Figure 3. Location of the area for modification A on the board.

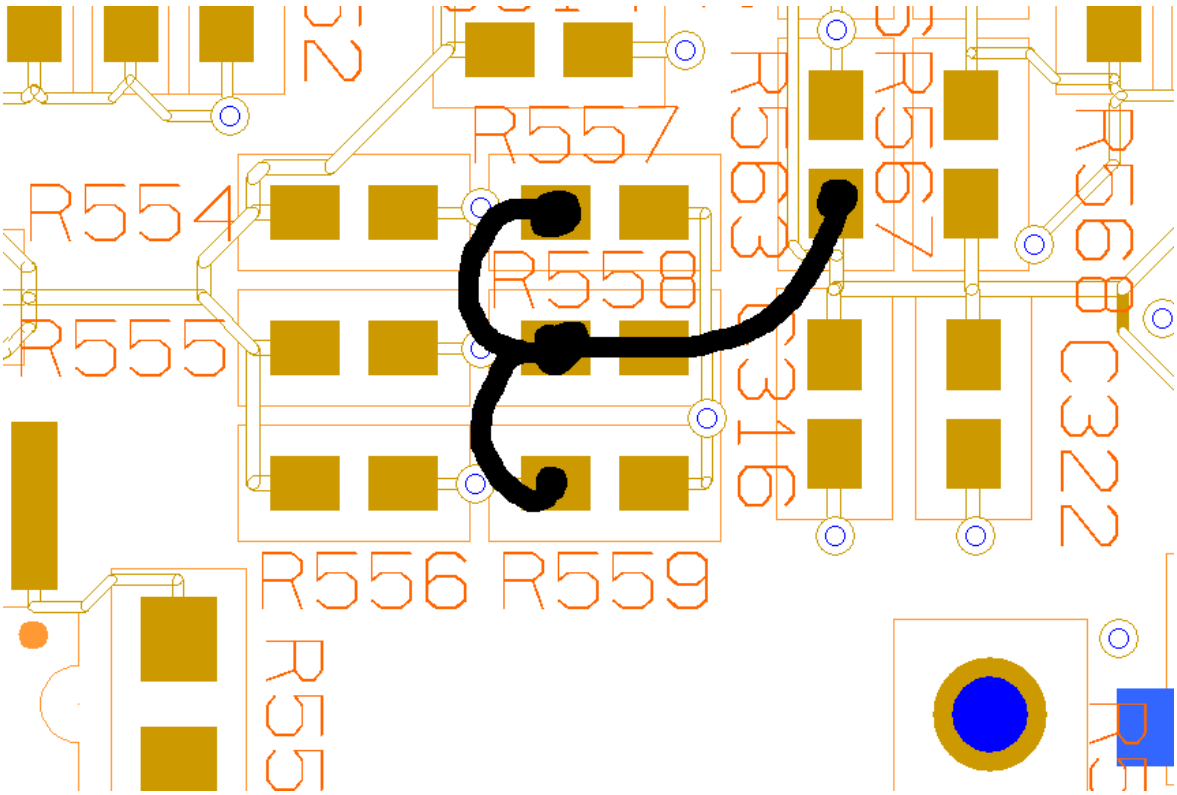

Figure 4. A close up view of the area for modification A, showing the needed jumpers.

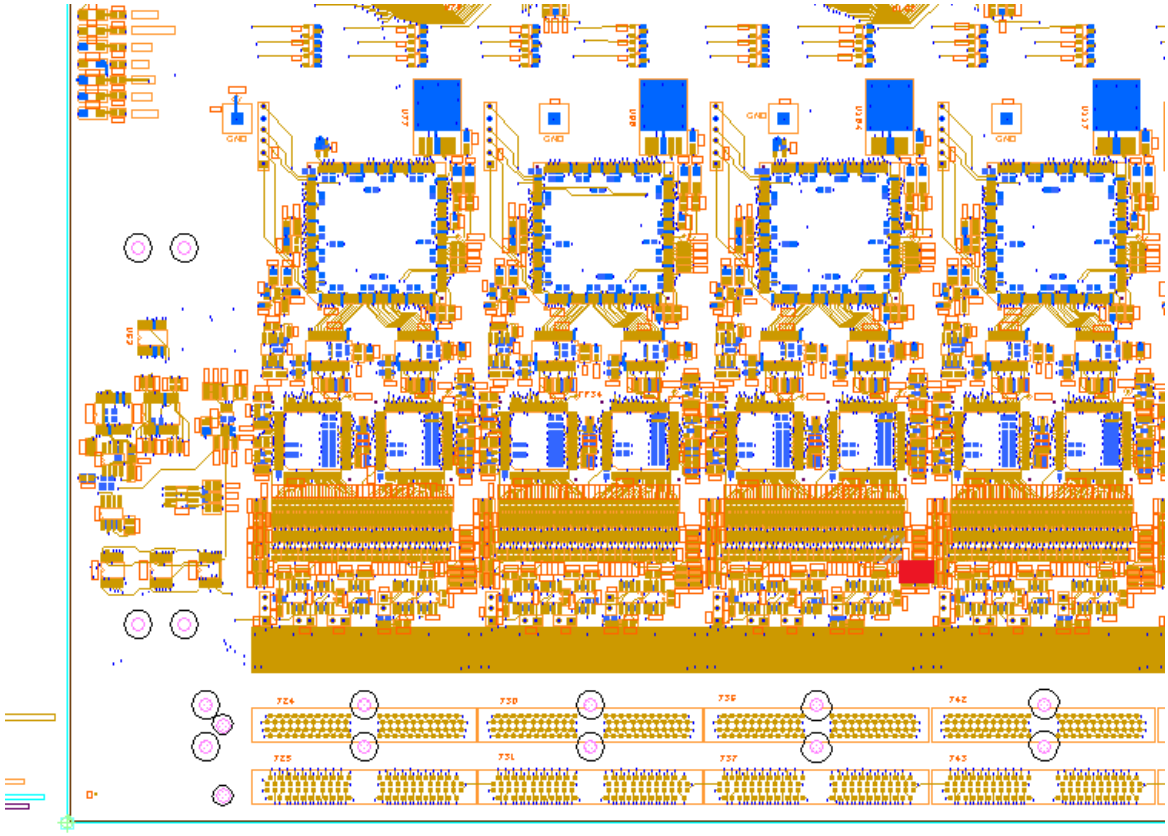

Figure 5. Location of the area for modification B on the board.

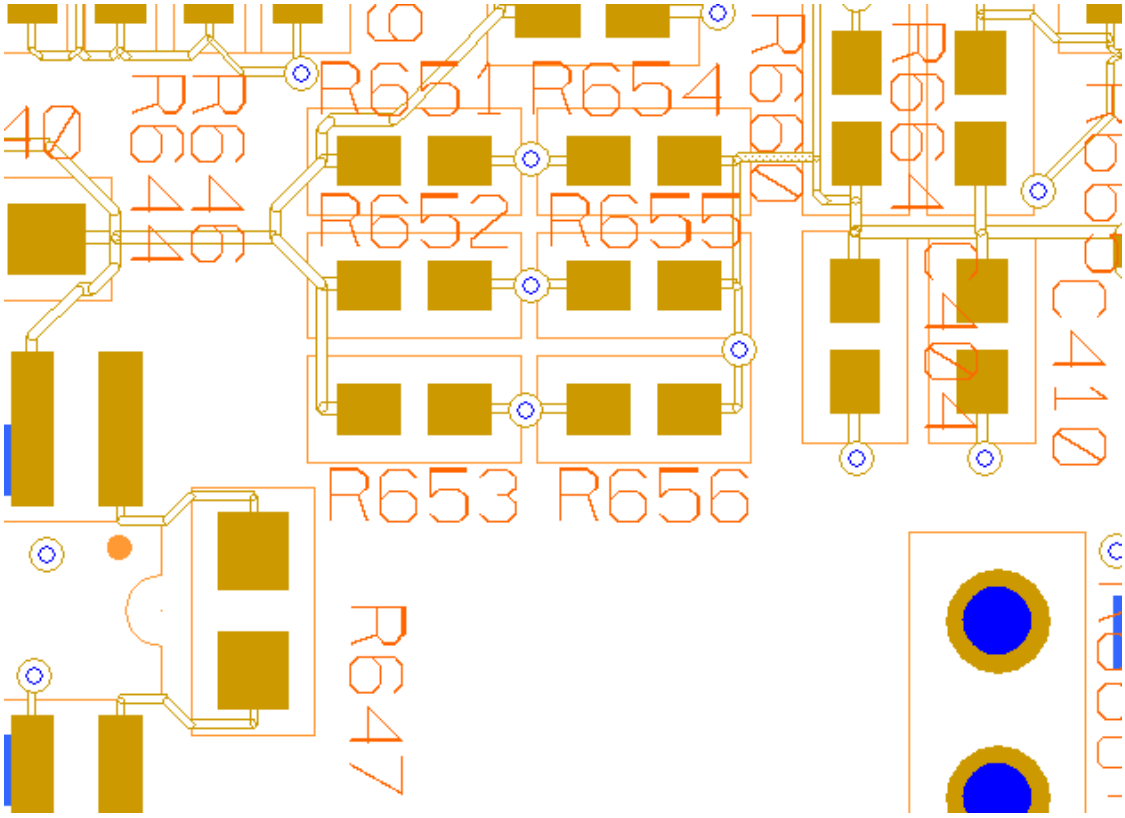

Figure 6. A close up view of the area for modification B.

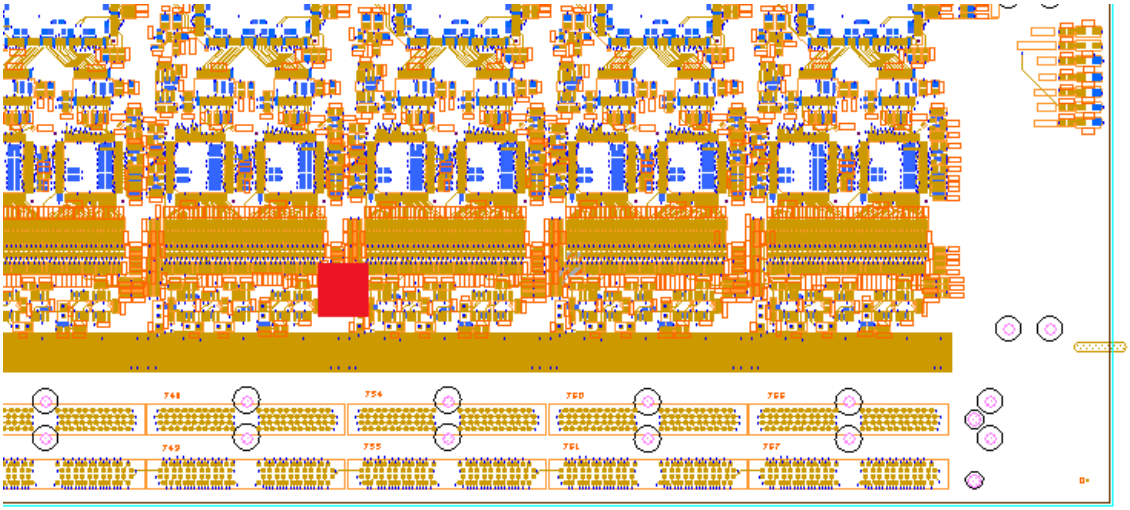

Figure 7. Location of the area for modification C on the board.

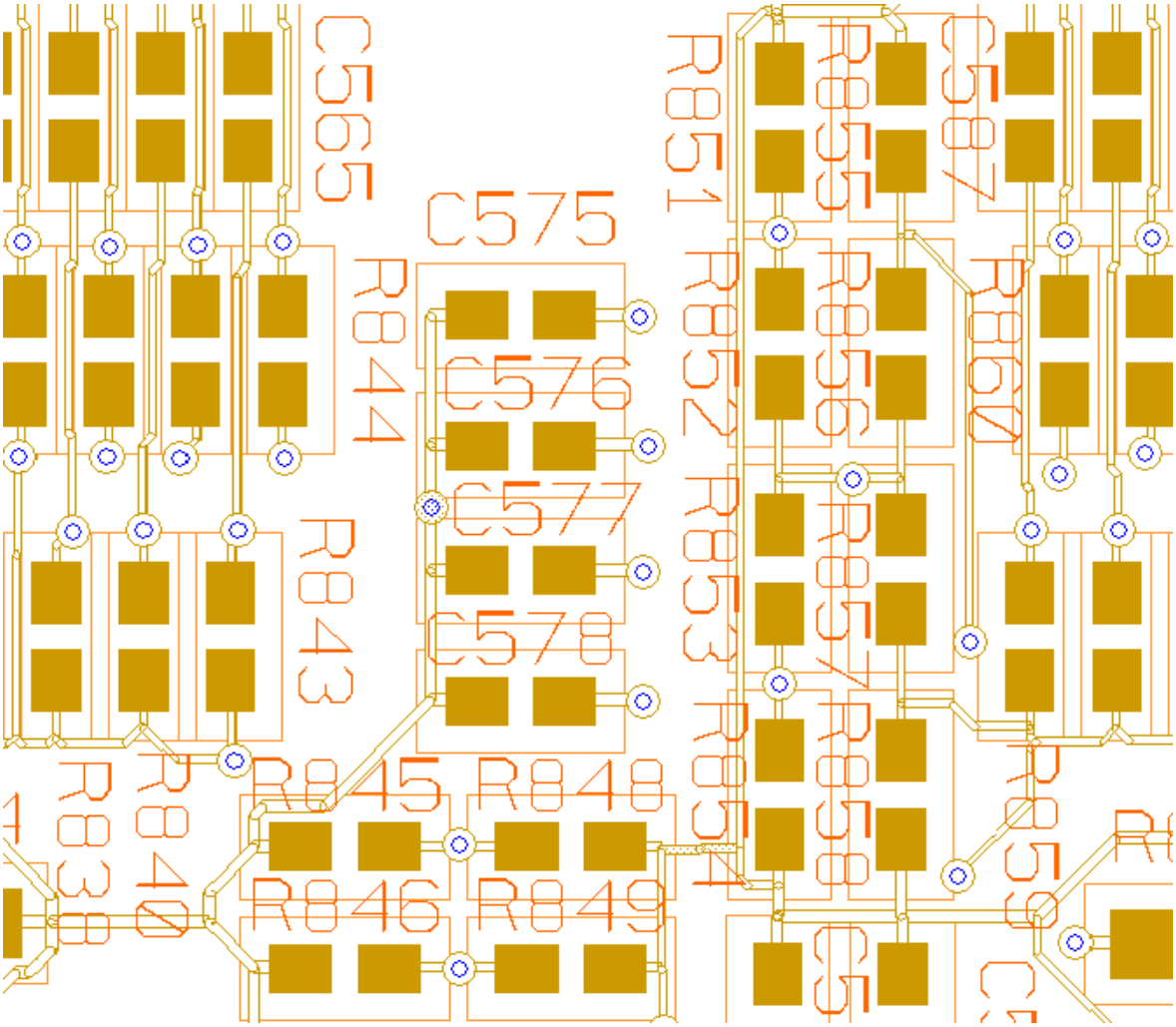

Figure 8. A close up view of the area for modification C.

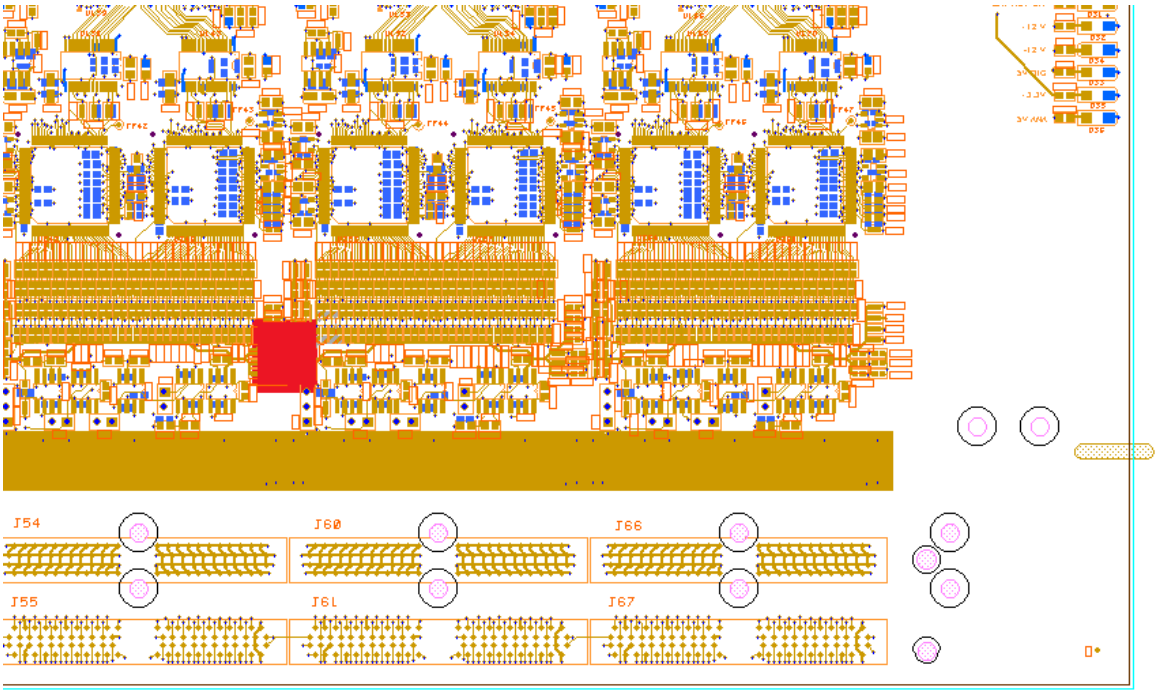

Figure 9. Location of the area for modification D on the board.

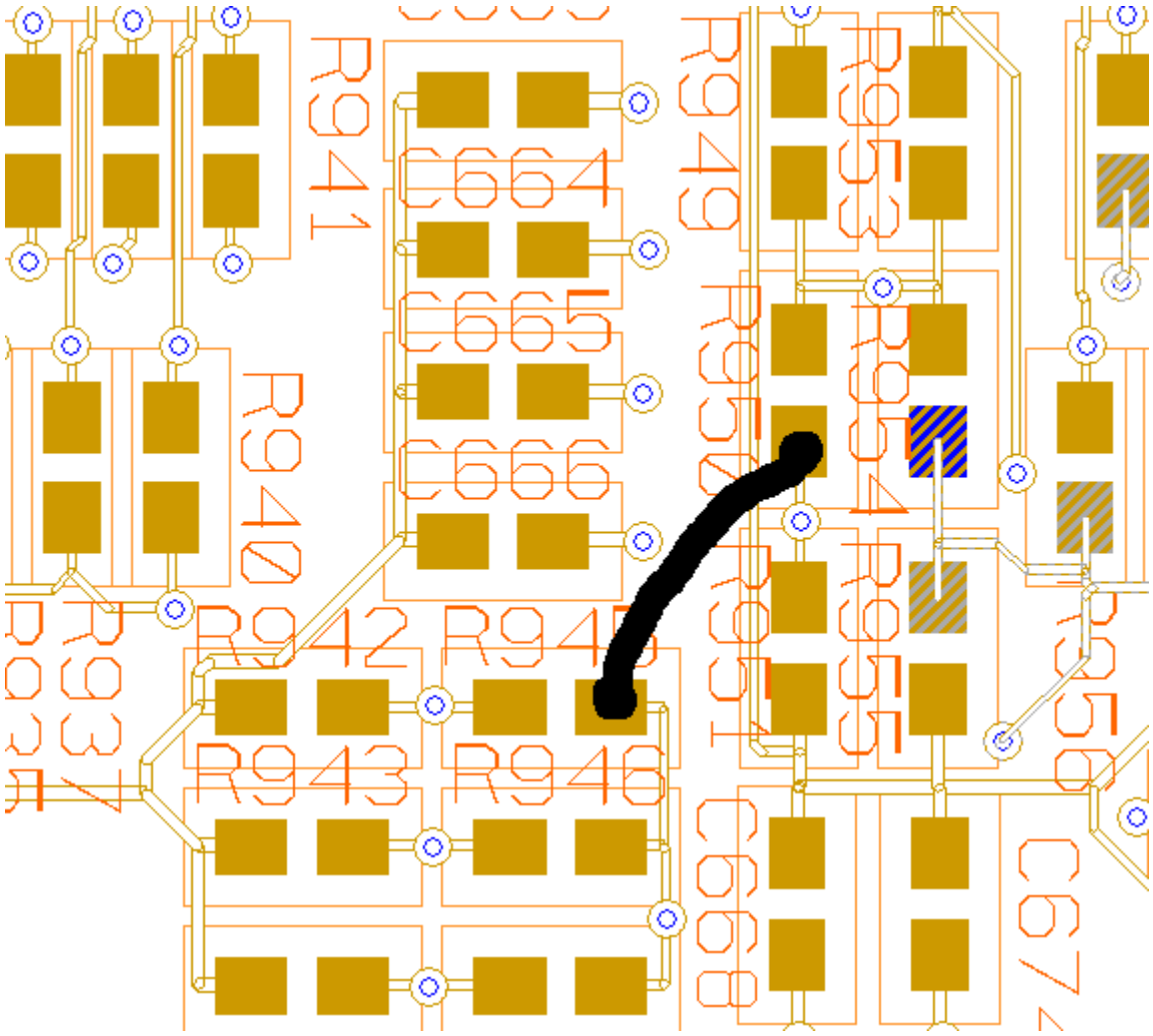

Figure 10. A close up view of the area for modification D, showing the needed jumpers.